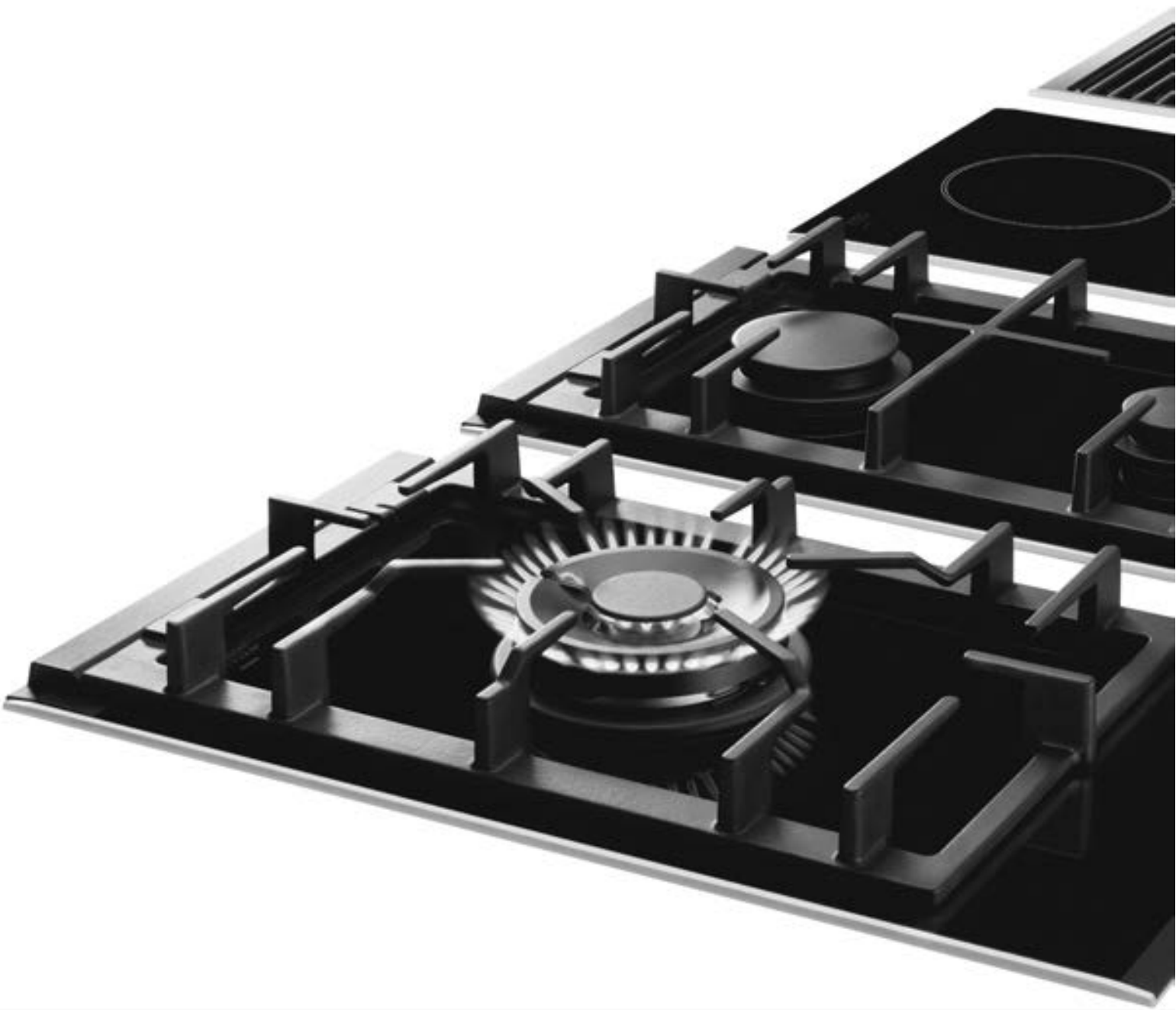

嵌入式燃气灶
Built in gas hob

BOSCH

[zh] 说明手册
[en] Instruction manual

PRA326B70W
PRB326B70W
PRC3261W

保留备用
keep for use

PRB3.....

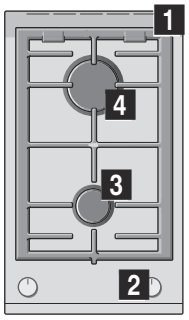

PRA3.....

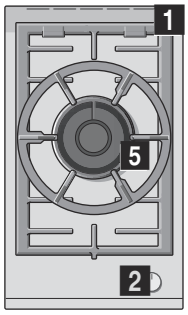

1 锅架
2 控制旋钮
3 半快速燃烧器 1.5 kW
4 快速燃烧器 2.3 kW
5 双焰燃烧器 5.5 kW

1 Pan supports
2 Control knobs
3 Semi-rapid burner 1.5 kW
4 Rapid burner 2.3 kW
5 Dual double-flame wok burner 5.5 kW

zh 目录

安全预防措施 3
您的新电器 5
附件 5
燃气型燃烧器 5
手动开启 5
自动开启 5
安全系统 6
关断燃烧器 6
火力级别 6
警告 6
烹饪指南 6
烹饪锅具 6
合适的锅具 6
使用预防措施 7
清洁和维护 7
清洁 7
维护 7
故障排除 7
技术支持服务 8
保修条款 8
旧电器和包装 8
环保型处理 8

⚠ 安全预防措施

请仔细阅读说明手册。只有这样才能安全正确地使用电器。请保留使用说明与安装说明，并在售出本电器时一起转交给买主。

如果不遵守本手册中的要求，制造商不承担任何责任。

本说明中的图片仅作指导之用。

在将本电器安装到橱柜中之前请勿拆封。如果电源线有任何损坏，请勿接通电器。请联系我们的技术支持服务部。

本电器属于 3 类产品，符合 EN 30-1-1 规范中关于燃气型电器：嵌入式电器的规定。

在安装新灶具之前，请务必按照装配说明进行安装。

本电器不能安装在游艇或篷车中。

本电器必须在通风良好的场合下使用。

本电器不适合用外部定时器或遥控器操作。

所有与安装、连接、调整和燃气类型改装有关的操作都必须由获得授权的技术人员根据适用的所有规定、标准以及当地的燃气和电力提供商的要求执行。其中应特别注意通风方面的规定。

本电器的燃气类型出厂设置标识在铭牌上。如果需要进行改装，请查阅装配说明。如要改装为其它燃气类型，建议与技术支持服务部联系。

本电器仅供家庭使用，不供商业用途和专业人员使用。本电器仅用于烹饪目的，不能作为加热系统。仅当电器用于设计用途时保修才有效。

切勿在无人看管时让本电器保持运行。

切勿使用非灶具厂家所推荐的盖子或儿童保护屏障。它们可能引起意外，比如因过热、点火或材料碎片脱落导致的意外。

8 岁及以上儿童、身体、感官或精神有缺陷的人员或缺乏经验和知识的人员，必须在有人监督或在得到电器使用安全指导并了解相关危险的条件下，方可使用本电器。

严禁儿童玩耍本电器。不得由儿童在无人监督的情况下进行清洁和用户维护工作。

爆燃危险！

封闭区域内积聚的未燃烧气体存在爆燃隐患。请勿将本电器置于风口位置，否则可能会吹灭燃烧器。请仔细阅读燃气型燃烧器的操作说明和警告。

有燃气中毒的危险！

在使用此燃气设备时，厨房内会变得又热又潮，并会产生燃烧产物。尤其在使用灶具时，要确保厨房具备良好的通风条件：可以打开自然通风孔，也可以安装通风系统（吸油烟机）。如果要在长时间内集中使用电器，可能需要额外或更有效的通风措施：打开窗口或加大通风系统的功率。

有灼伤危险！

灶头及周围区域会变得很热。切勿触碰灼热表面。让 8 岁以下儿童远离本电器。

有着火危险！

- 灶头变得很热。切勿在灶头上放置易燃品。切勿在灶头上储物。
- 请勿在本电器下方或周围存放或使用腐蚀性化学品、会释放烟气的产品、易燃材料或非食用产品。
- 过热的脂肪或油很容易着火。切勿在无人监管的情况下进行油的加热。如果油或脂肪着火，切勿用水浇灭。应用盖子盖住锅具将火扑灭，并关断灶头。

有受伤危险！

- 若使用损坏或尺寸不当的锅具、将锅具悬置在灶具的边缘或者锅具放置不当，均会导致严重伤害。遵循随烹锅提供的建议和警告。
- 如果发生故障，请切断电器的燃气和电源。如需维修，致电我们的技术支持服务部。
- 请勿擅自改动电器内部元件。如有必要，致电我们的技术支持服务部。
- 如果某个控制旋钮无法转动，请勿强行转动。请立即致电技术支持服务部进行修理或更换。

有电击危险！

- 不要使用蒸汽清洁器清洁本电器。
- 玻璃上的裂纹或破裂可能有触电危险。断开保险丝盒中的保险丝。请通知技术支持服务部。

警告：如果该表面有裂纹，关掉灶具以避免可能出现的电击。

您的新电器

第二页提供了您的新电器的总体视图和燃烧器的火力。

可使用连接附件将这些电器与同品牌的传统灶具结合使用。详情请参见宣传材料。

附件

根据型号，灶具可能包含以下附件。技术支持服务部亦可提供这些附件。

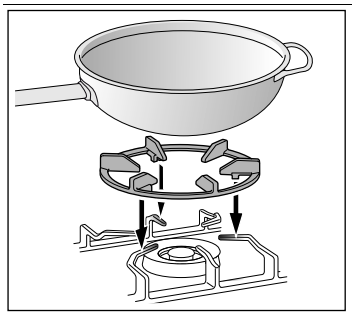

附加炒锅架
此附件仅适用于双焰和三焰燃烧器，适合锅底直径大于 26 cm 的锅具（例如烤肉盘、陶制砂锅、大型圆底锅具等）。

应使用附加炒锅架，以延长电器寿命。

因不使用这些附件或使用不当而造成的事故，制造商概不承担责任。

燃气型燃烧器

图中显示各个燃烧器的相应控制旋钮。

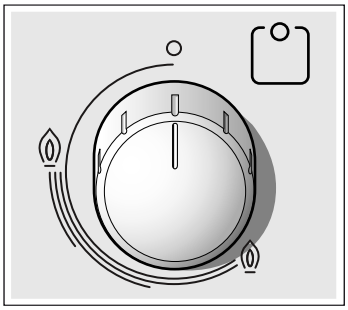

务必正确安装燃烧器所有零部件和锅架，这对实现电器的正常工作至关重要。切勿调换火盖。

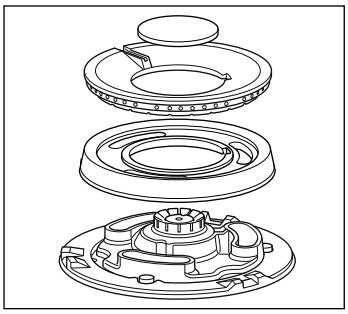

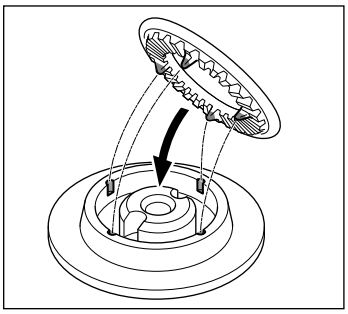

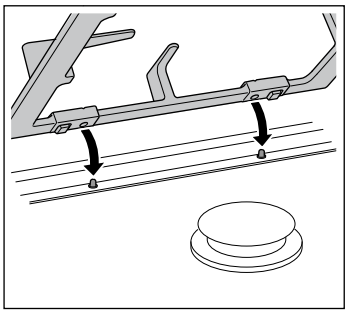

手动开启

1. 按下所选燃烧器的控制旋钮，逆时针转至所需设置。
2. 使用任意类型的点火器或明火（打火机、火柴等），将其靠近燃烧器。

自动开启

如果灶具可自动开启（火花点火器）：

1. 按下所选燃烧器的控制旋钮，逆时针转至最大火力设置。
   在按住控制旋钮的时候，所有燃烧器上都会产生火花。火焰点燃。
2. 松开控制旋钮。
3. 将控制旋钮转至所需要的设置。

如果没有产生火焰，则将控制旋钮转至关闭设置，然后重复以上步骤。这次按住控制旋钮较长时间（最多达 10 秒）。

⚠ **爆燃危险！**

如果在 15 秒后，火焰仍未点燃，要关断燃烧器，并打开附近的窗口或门。等待至少一分钟后，再次尝试开启燃烧器。

安全系统

某些型号的灶具可能配有安全系统（热偶），用于防止在燃烧器意外关断时燃气溢漏。

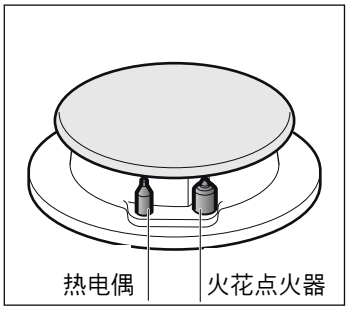

确保该设备已激活：

1. 正常开启燃烧器。
2. 火焰点燃后仍不要松开控制旋钮，继续按下并用力按住旋钮 4 秒钟。

关断燃烧器

将相应的控制旋钮顺时针转至 0 设置。

火力等级

渐进式控制旋钮可用于控制所需的火力（从最小到最大）。

设置	○	控制旋钮关断
大火		最大火力或孔口，电源开启
小火		最小火力或孔口

对于双焰燃烧器，内、外层火焰可分别控制。可用的火力等级如下：

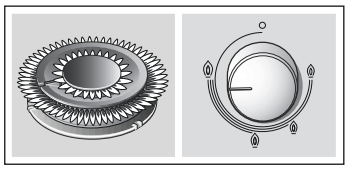

内层和外层火焰均达到最大火力。

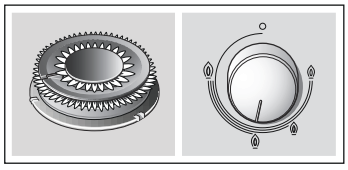

外层火焰达到小火力，内层火焰达到最大火力。

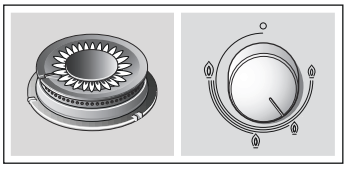

内层火焰达到最大火力。

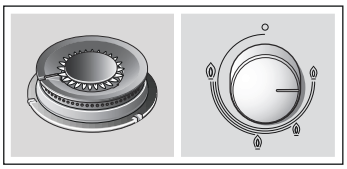

内层火焰达到小火力。

警告

在燃烧器运转期间，听到轻微的滋滋声属于正常现象。

首次使用燃烧器时会有气味，属于正常现象；这不会导致危险状况，也不表示存在故障。这些现象稍后会自行消失。

橙色火焰为正常。这是因为空气中存在灰尘、喷溅液等而导致的。

如果燃烧器火焰被意外吹灭，关断燃烧器操作控制旋钮，并且在至少一分钟内不可尝试重新点燃。

在关断燃烧器几秒钟后，将发出声响（重击）；这并非故障，而是表示安全装置不再运转。

尽可能使燃烧器保持清洁。如果火花点火器脏污，将不能正常点火。定期使用非钢丝刷进行清洁。请牢记，切勿让火花点火器受到猛烈的撞击。

烹饪指南

燃烧器	最大 - 大	中	小
炒锅燃烧器	煮、蒸、煎、烤、西班牙海鲜饭、亚洲食物（炒锅）。	重新加热以及食物保温：已烹饪和预先烹饪过的菜肴	
快速燃烧器	炸肉块、肉排、摊鸡蛋、油炸食物	米饭、白汁沙司和蔬菜炖肉	蒸：鱼、蔬菜
半快速燃烧器	蒸土豆、新鲜蔬菜、炖蔬菜和意大利面	重新加热、保温和制作美味砂锅菜	

烹饪锅具

合适的锅具

燃烧器	最小的锅具直径	最大的锅具直径
炒锅燃烧器	22 cm	-
快速燃烧器	22 cm	26 cm
半快速燃烧器	14 cm	20 cm

使用预防措施

以下建议可帮助您节约能源和避免锅具损坏：

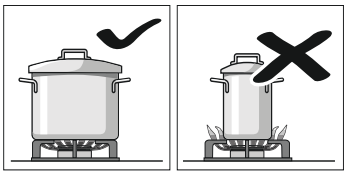

使用适合每个燃烧器尺寸的锅具。

不要在大燃烧器上使用小型锅具。切勿使火焰触及锅具的侧面。

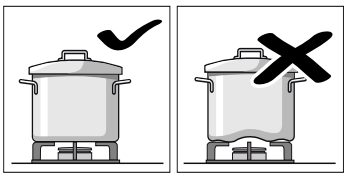

不要使用有损坏的锅具，这样的锅具不能平稳地放置在灶具上，可能会翻倒。

仅使用锅底平整、厚实的锅具。

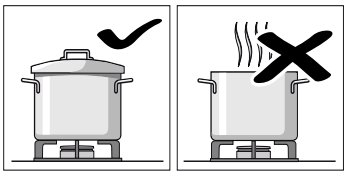

不要不盖盖子烹饪；盖子要盖好，否则会浪费能源。

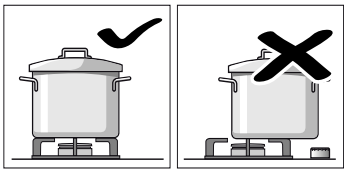

请务必将锅具放在燃烧器正中心，不可偏离。否则可能会翻倒。

不要将大型锅具放在靠近控制旋钮的燃烧器上，否则可能会因高温损坏控制旋钮。

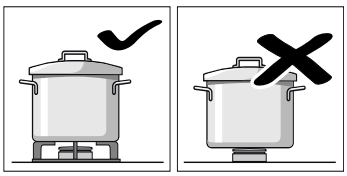

将锅具放在锅架上，切勿直接放在燃烧器上。

在使用本电器之前，一定要保证锅架和火盖位置正确。

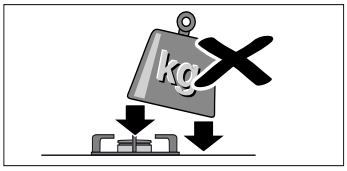

在灶具上放锅具时要小心。

不可碰击灶具，不可在灶具上放过重的物体。

清洁和维护

清洁

电器冷却之后，用海绵蘸取肥皂和水进行清洁。

每次使用后，在燃烧器各部件冷却下来后清洁相应表面。如果留有残留物（烤硬的食物、油滴等），即使很少，仍会粘在表面上，以后清除起来更困难。为了保证火焰能轻松点燃，必须清洁各个孔槽。

部分锅具挪动后可能会在锅架上留下金属碎屑。

请用非钢丝刷沾上肥皂水刷洗燃烧器和锅架。

如果锅架装有橡胶脚垫，这些部位也务必进行清洁。这些脚垫可能会变松，锅架可能会刮伤灶具。

一定要使燃烧器和锅架保持干燥。否则，在开始烹饪时，灶具上的水滴或潮湿部位会损坏搪瓷涂层。

清洁并弄干燃烧器后，确保燃烧器盖正确盖在分火器上。

小心！

- 不要使用蒸汽清洁器。这会损坏灶具。
- 切勿使用腐蚀性化学品、钢丝球、锋利工具、刀具等来清除灶具上的食物硬渣。
- 切勿使用小刀、刮刀或类似器具清理玻璃和燃烧器边缘的交汇点、金属框架或者玻璃 / 铝制面板（如有）。

维护

液体溅出后一定要立即清除。这将防止食物残渣粘在灶具表面，让您更省力。

切勿使锅具划过玻璃表面，这可能刮伤玻璃。此外，不要使任何重物或尖锐物落到玻璃上。切勿撞击灶具的任何部分。

清洁水果和蔬菜过程中可能掉落沙粒，沙粒会刮伤玻璃表面。

拔丝或含糖量高的食物可能产生喷溅，应使用玻璃刮刀马上清除灶头上的喷溅物。

故障排除

有时某些故障经发现后可以轻易解决。在致电技术支持服务部之前，记住以下建议：

故障	可能原因	解决方案
常规电气系统发生故障。	保险丝损坏。	检查主保险丝盒中的保险丝，并在损坏时予以更换。
	自动安全开关或断路器跳闸。	检查主控制面板，查看自动安全开关或断路器是否跳闸。

故障	可能原因	解决方案
自动开启功能不工作。	火花点火器和燃烧器之间可能粘有食物或清洁用品。	火花点火器和燃烧器之间的空隙必须干净。
	燃烧器潮湿。	小心烘干火盖。
	火盖位置不正确。	检查火盖位置是否正确。
	电器未进行接地处理、连接不良或存在接地故障。	联系安装技术人员。
燃烧器火焰不均匀。	燃烧器组件位置不正确。	请将部件正确地放置到相应的燃烧器上。
	燃烧器上的槽口脏污。	清洁燃烧器上的槽口。
燃气流不正常或没有燃气。	通过燃气旋塞阻断燃气源。	打开所有燃气旋塞。
	如果燃气来源为燃气罐，则检查是否已空。	更换燃气罐。
厨房有燃气味。	气阀打开。	关闭龙头。
	燃气罐连接错误。	检查接缝是否完好。
	可能存在漏气。	关闭燃气源，保持现场通风，并立即通知获得授权的安装技术人员来检查和验证安装情况。在确认安装或电器本身不存在漏气情况之前，请勿使用本电器。
松开控制旋钮后，燃烧器立即关断。	控制旋钮按下时间不够长。	燃烧器点燃后，继续按住控制旋钮几秒钟。
	燃烧器上的槽口脏污。	清洁燃烧器上的槽口。

技术支持服务

在联系我们的技术支持服务部时，请提供电器的产品号 (E-Nr.) 和生产号 (FD)。灶具下部的铭牌上及用户手册的标签上均提供了这些信息。

保修条款

如果交付的电器发生损坏或者质量达不到您期望的标准（这不太可能），请尽快告知我们。为使保修有效，禁止擅自改动电器或以不当的方式使用。

所适用的保修条款由购买电器时所在国的公司代理处制订。详细信息可从零售店获取。必须出示购买凭证才能获得质保利益。

我们保留随时更改的权利。

旧电器和包装

如果电器铭牌上标有 符号，请牢记下列说明：

环保型处理

以环保方式处置包装材料。

本电器依据有关废旧电子电气电器（电子电气设备废弃物 — WEEE) 的欧洲指令 2012/19/EU 进行标识。该指令规定了在欧盟范围内有效地回收和再利用旧电器的框架。

电器包装材料经过严格挑选，确保在运输途中有效保护电器。这些材料 100% 可回收利用，因而能减少对环境的危害。为保护环境，请遵从下列建议：

- 将包装丢弃在恰当的可回收垃圾箱中。
- 在丢弃旧电器前，确保电器已报废。请联系当地的管理机构，查询最近的回收中心地址，以便处理电器。
- 请勿将用过的油倒入水槽。请将油收集在密封容器中并送到合适的收集点，或者，如果没有合适的收集点，则丢在垃圾箱中（最终将送往由专人管理的垃圾站；这可能不是最好的处理方式，但这样可以避免污染地下水）。

en Table of contents

SAFETY PRECAUTIONS **9**
YOUR NEW APPLIANCE **11**
ACCESSORIES 11
GAS BURNERS **11**
SWITCHING ON MANUALLY 11
SWITCHING ON AUTOMATICALLY 11
SAFETY SYSTEM 12
SWITCHING OFF A BURNER 12
POWER LEVELS 12
WARNINGS 12
COOKING GUIDELINES 12
COOKING PANS **12**
SUITABLE PANS 12
PRECAUTIONS FOR USE 13
CLEANING AND MAINTENANCE **13**
CLEANING 13
MAINTENANCE 13
TROUBLE SHOOTING **13**
TECHNICAL ASSISTANCE SERVICE **14**
WARRANTY CONDITIONS 14
USED APPLIANCES AND PACKAGING **14**
ENVIRONMENTALLY-FRIENDLY DISPOSAL 14

⚠ Safety precautions

Read these instructions carefully. You will only be able to use your appliance safely and effectively when you have read them. These operating and installation instructions should be retained, and passed onto the buyer if the appliance is sold.

The manufacturer is exempt from all responsibility if the requirements of this manual are not complied with.

The images shown in these instructions are for guidance only.

Do not remove the appliance from its protective packaging until it is installed in the unit. Do not switch on the appliance if it is damaged in any way. Contact our Technical Assistance Service.

This appliance is class 3 type, according to the EN 30-1-1 regulation for gas appliances: built-in appliance.

Before installing your new hob, ensure that it is being installed according to the assembly instructions.

This appliance cannot be installed on yachts or in caravans.

This appliance must only be used in well ventilated places.

This appliance is not intended for operation with an external clock timer or a remote control.

All operations relating to installation, connection, regulation and conversion to other gas types must be performed by an authorised technician, respecting all applicable regulations, standards and the specifications of the local gas and electricity suppliers. Special attention shall be paid to ventilation regulations.

This appliance leaves the factory set to the gas type that is indicated on the specifications plate. If this needs to be changed, please consult the assembly instructions. It is recommended you contact the Technical Assistance Service to change to another gas type.

This appliance has been designed for home use only, not for commercial or professional use. This appliance is only intended for cooking purposes, not as a heating system. The warranty will only be valid if the appliance is used for the purpose for which it was designed.

Never leave the appliance unattended during operation.

Do not use lids or protective barriers for children which are not recommended by the hob manufacturer. They may cause accidents such as those due to the overheating, ignition or detachment of fragments of materials.

This appliance may be used by children 8 years old and older and by persons with reduced physical, sensory or mental capacity or a lack of experience or knowledge if they are supervised or they have been instructed about the safe use of the appliance and have understood the associated dangers.

Never let children play with the appliance. Cleaning and user maintenance must not be carried out by unsupervised children.

Risk of deflagration!

Accumulation of unburned gas in an enclosed area carries a risk of deflagration. Do not subject the appliance to draughts. These might blow out the burners. Carefully read the instructions and warnings on the operation of gas burners.

Risk of poisoning!

The kitchen will become hot and humid and combustion products produced when this gas appliance is used. Make sure the kitchen is well ventilated, particularly when the hob is in operation: either keep the natural ventilation apertures open, or install a ventilation system (extractor hood). Intense prolonged use of the appliance may require additional or more effective ventilation: open a window or increase the power of the ventilation system.

Risk of burns!

The hotplates and their immediate vicinity get very hot. Never touch the hot surfaces. Keep children under 8 years old well away from this appliance.

Risk of fire!

- The hotplates get very hot. Do not rest inflammable objects on the hob. Do not store objects on the hob.
- Do not store or use corrosive chemicals, products which produce fumes, inflammable materials or non-food products below or near this domestic appliance.
- Fat or oil which is overheated can catch fire easily. Never leave fat or oil to heat up unattended. If oil or fats do catch fire, never use water to put the fire out. Put the fire out by covering the pan with a lid and switch off the hotplate.

Risk of injuries!

- Pans which are damaged, are not the right size, hang over the edge of the hob or are not positioned correctly can cause serious injuries. Follow the advice and warnings provided relating to the cooking pans.
- In the event of a malfunction, turn off the appliance’s gas and electricity supply. For repairs, call our Technical Assistance Service.
- Do not tamper with the appliance's interior. If necessary, call our Technical Assistance Service.
- If one of the control knobs will not turn, do not force it. Call the Technical Assistance Service immediately so that they can repair or replace them.

Risk of electric shock!

- Do not clean the appliance using steam cleaners.
- Cracks or breaks in the glass may carry an electrocution risk. Disconnect the fuse from the fuse box. Notify the Technical Assistance Service.

Your new appliance

Page 2 shows an overall view of your new appliance as well as the burner power.

These appliances can be combined with conventional hobs of the same make, using the joint accessory. See the catalogue for details.

Accessories

Depending on the model, the hob may include the following accessories. These can also be acquired from the Technical Assistance Service.

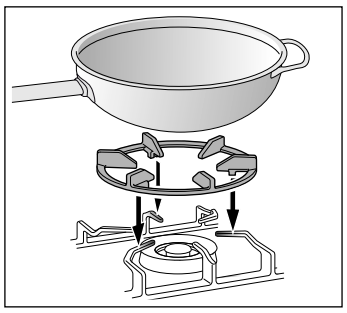

Additional wok pan support
Only for use on double and triple-flame wok burners with pans which are more than 26 cm in diameter, grill pans, earthenware casserole dishes, large pans with a round base, etc.

The additional wok pan support should be used to prolong the appliance's useful life.

The manufacturer accepts no liability if these accessories are not used or are used incorrectly.

Gas burners

There are indications to show which burner each control knob operates.

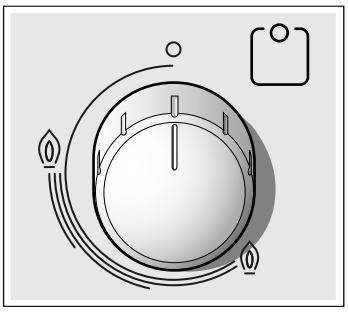

It is essential to ensure that all the burner parts and pan supports are correctly installed for the appliance to work correctly. Do not swap the burner caps around.

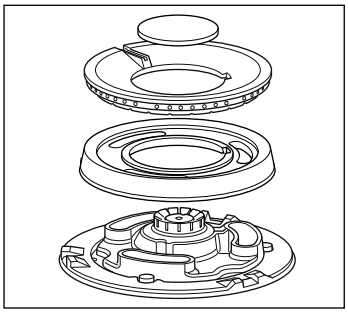

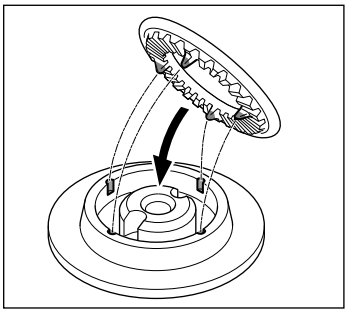

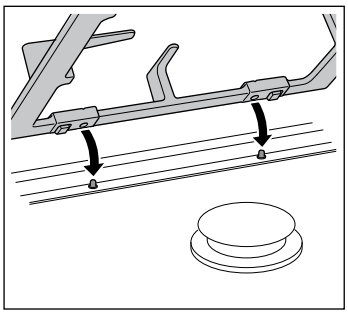

Switching on manually

1. Press the chosen burner control knob and turn it anticlockwise to the required setting.
2. Use any type of lighter or flame (cigarette lighter, matches, etc.) and bring it close to the burner.

Switching on automatically

If your hob can be switched on automatically (ignition sparkers):

1. Press the chosen burner control knob and turn it anticlockwise to the maximum power setting.
   While the control knob is still pressed down, sparks are produced on all burners. The flame ignites.
2. Release the control knob.
3. Turn the control knob to the required setting.

If it does not come on, turn the control knob to the off setting and repeat the steps above. This time, press and hold the control knob for longer (up to 10 seconds).

⚠ **Risk of deflagration!**

If after 15 seconds the flame does not ignite, switch off the burner and open a nearby window or door. Wait at least one minute before trying to switch the burner back on.

Safety system

Depending on the model, your hob may have a safety system (thermocouple) that prevents the flow of gas if the burners accidentally switch off.

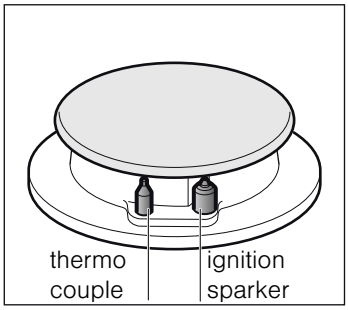

To ensure that this device is active:

1. Switch on the burner as usual.
2. Without releasing the control knob, press and hold it down firmly for 4 seconds after lighting the flame.

Switching off a burner

Turn the corresponding control knob clockwise to the 0 setting.

Power levels

The progressive control knobs can be used to control the power needed, from minimum to maximum power.

Setting	O	Control knob off
High flame		Maximum capacity or aperture and electricity on
Low flame		Minimum capacity or aperture

For dual double-flame burners, the inner and outer flames can be controlled separately. The available power levels are as follows:

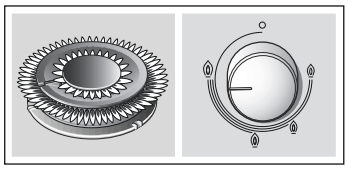

Inner and outer flame on full power.

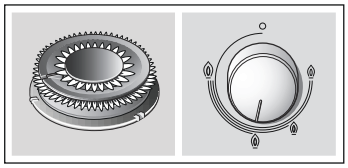

Outer flame on low power, inner flame on full power.

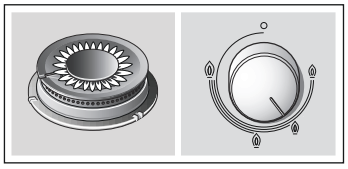

Inner flame on full power.

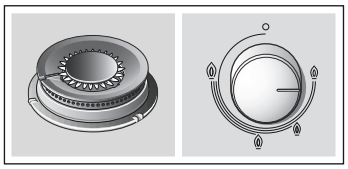

Inner flame on low power.

Warnings

It is normal to hear a soft whistling noise while the burner is operating.

When first used, it is normal for the burner to give off odours. This does not pose any risk and does not indicate a malfunction. They will disappear in time.

An orange-coloured flame is normal. This is caused by the presence of dust in the atmosphere, spilt liquids, etc.

If the burner flames are accidentally blown out, switch off the burner operating control knob and do not try to relight it for at least 1 minute.

A few seconds after the burner is switched off, a sound (thud) will be produced. This is not a fault - this means that the safety device is no longer operating.

Keep the burner as clean as possible. If the ignition sparkers are dirty they will not light properly. Clean them periodically using a small non-wire brush. Bear in mind that the ignition sparkers must not suffer any serious impacts.

Cooking guidelines

Burner	Very high - High	Medium	Low
Wok burner	Boiling, steaming, griddling, toasting, paellas, Asian food (wok).	Reheating and keeping things hot: cooked and pre-cooked dishes	
Rapid burner	Escalopes, steaks, omelettes, frying	Rice, white sauce, ragout	Steaming: fish, vegetables
Semi-rapid burner	Steamed potatoes, fresh vegetables, vegetable stews, pasta	Reheating, keeping things hot and making tasty casseroles	

Cooking pans

Suitable pans

Burner	Minimum pan diameter	Maximum pan diameter
Wok burner	22 cm	-
Rapid burner	22 cm	26 cm
Semi-rapid burner	14 cm	20 cm

Precautions for use

The following advice is intended to help you save energy and prevent pan damage:

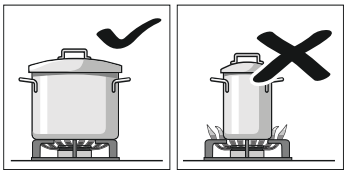

Use pans which are the right size for each burner.

Do not use small pans on large burners. The flame must not touch the sides of the pan.

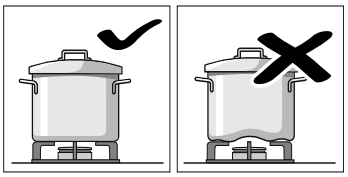

Do not use damaged pans, which do not sit evenly on the hob. Pans may tip over.

Only use pans with a thick, flat base.

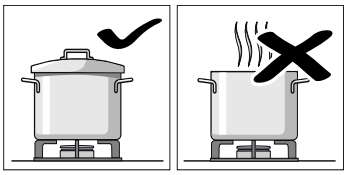

Do not cook without using a lid and make sure the lid is properly fitted. This wastes energy.

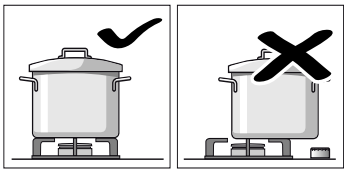

Always centre the pan over the burner, not to one side. Otherwise it could tip over.

Do not place large pans on the burners near the control knobs. These may be damaged by the very high temperatures.

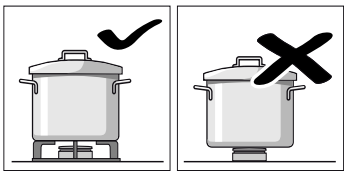

Place the pans on the pan supports, never directly on the burner.

Make sure that the pan supports and burner caps are correctly positioned before using the appliance.

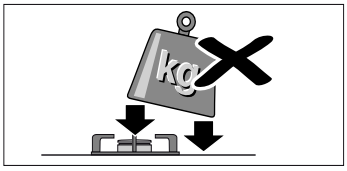

Pans should be placed on the hob carefully.

Do not strike the hob and do not place excessive weight on it.

Cleaning and maintenance

Cleaning

Once the appliance is cool, use a sponge to clean it with soap and water.

After each use, clean the surface of the respective burner parts once they have cooled down. If any residue is left (baked-on food, drops of grease etc.), however little, it will become stuck to the surface and more difficult to remove later. The holes and grooves must be clean for the flame to ignite properly.

The movement of some pans may leave metal residue on the pan supports.

Clean the burners and pan supports using soapy water and scrub with a non-wire brush.

If the pan supports are fitted with rubber rests, ensure that these are also cleaned. The rests may come loose and the pan support may scratch the hob.

Always dry the burners and pan supports completely. Water droplets or damp patches on the hob at the start of cooking may damage the enamel.

After cleaning and drying the burners, make sure the burner caps are correctly positioned on the diffuser.

Caution!

- Do not use steam cleaners. This could damage the hob.
- Never use abrasive products, steel scourers, sharp implements, knives, etc. to remove bits of hardened food from the hob.
- Do not use knives, scrapers or similar implements to clean the point where the glass meets the burner trims, the metal frames or the glass/aluminium panels, if fitted.

Maintenance

Always clean off any liquid as soon as it is spilt. This will prevent food remains from sticking to the hob surface and you will save yourself any unnecessary effort.

Never slide pans across the glass surface, as you may scratch it. In addition, try not to drop heavy or sharp objects on the glass. Never strike any part of the hob.

Grains of sand that may come from cleaning fruits and vegetables will scratch the glass surface.

Melted sugar, or foods which contain a lot of sugar which may have spilt, should be cleaned off the hotplate immediately, using the glass scraper.

Trouble shooting

Sometimes certain faults detected can be easily resolved. Before calling the Technical Assistance Service, bear in mind the following advice:

Fault	Possible cause	Solution
The general electrical system is malfunctioning.	Defective fuse.	Check the fuse in the main fuse box and change it if it is damaged.
	The automatic safety switch or circuit breaker has tripped.	Check the main control panel to see if the automatic safety switch or circuit breaker has tripped.

Fault	Possible cause	Solution
The automatic switching on function does not work.	There may be food or cleaning products stuck between the ignition sparkers and the burners.	The space between the ignition sparker and the burner must be clean.
	The burners are wet.	Dry the burner caps carefully.
	The burner caps are not correctly positioned.	Check that the burner caps are correctly positioned.
	The appliance is not earthed, is poorly connected or the earthing is faulty.	Contact the installation technician.
The burner flame is not uniform.	The burner components are not correctly positioned.	Correctly place the parts on the appropriate burner.
	The grooves on the burner are dirty.	Clean the grooves on the burner.
The gas flow is not normal or there is no gas.	The gas supply is blocked by gas taps.	Open all gas taps.
	If the gas is supplied from a gas cylinder, check that it is not empty.	Change the gas cylinder.
The kitchen smells of gas.	A gas tap has been left on.	Turn off the taps.
	Incorrect coupling of gas cylinder.	Check that the coupling is sound.
	Possible gas leak.	Shut off the gas supply, ventilate the premises and immediately notify an authorised installation technician to check and certify the installation. Do not use the appliance until ensuring that there is no gas leak in the installation or appliance itself.
The burner immediately switches off after releasing the control knob.	The control knob was not held down for long enough.	Once the burner is on, hold the control knob down a few seconds longer.
	The grooves on the burner are dirty.	Clean the grooves on the burner.

Technical Assistance Service

When contacting our Technical Assistance Service, please provide the product number (E-Nr.) and production number (FD) of the appliance. This information is given on the specifications plate located on the lower section of the hob and on the label in the user manual.

Warranty conditions

In the unlikely event that the appliance is damaged or does not meet your expectations in terms of quality, please inform us as soon as possible. For the warranty to be valid, the appliance must not have been tampered with, or used inappropriately.

The applicable warranty conditions are those set out by the company's representative office in the country of purchase. Detailed information is available from retail outlets. Proof of purchase must be presented to obtain the benefits of the warranty.

We reserve the right to introduce changes.

Used appliances and packaging

If the symbol is shown on the specifications plate, bear in mind the following instructions:

Environmentally-friendly disposal

Dispose of packaging in an environmentally-friendly manner.

This appliance is labelled in accordance with European Directive 2012/19/EU concerning used electrical and electronic appliances (waste electrical and electronic equipment - WEEE). The guideline determines the framework for the return and recycling of used appliances as applicable throughout the EU.

The packaging of your appliance has been manufactured using only the materials which are strictly necessary to guarantee efficient protection during transport. These materials are 100% recyclable, thus reducing the environmental impact. You can also contribute to caring for the environment by following the advice below:

- Dispose of the packaging in the appropriate recycling bin.
- Before you get rid of an old appliance, make sure you disable it. Contact your local authority to find out the address of your nearest recycling centre to dispose of your appliance.
- Do not pour used oil down the sink. Collect it in a sealed container and take it to an appropriate collection point or, failing that, place it in the rubbish bin (it will end up in a controlled dump; this is probably not the best option, but it will avoid contaminating ground water).

产品中有害物质的名称及含量

部件名称	有害物质					
	铅 (Pb)	汞 (Hg)	镉 (Cd)	六价铬 (Cr(VI))	多溴联苯 (PBB)	多溴二苯醚 (PBDE)
印制电路组件	×	○	○	○	○	○
显示单元	×	○	○	○	○	○
电源线及连接线	×	○	○	○	○	○
外壳组件	×	○	○	○	○	○
阀体及管路组件	×	○	○	○	○	○
燃烧器组件	×	○	○	○	○	○

本表格依据SJ/T 11364 的规定编制。

○：表示该有害物质在该部件所有均质材料中的含量均在 GB/T 26572 规定的限量要求以下。

×：表示该有害物质至少在该部件的某一均质材料中的含量超出GB/T 26572 规定的限量要求。

注意：上表包含了本公司生产的此类产品的全部部件，本产品的部件以实际配置为准。
如您对此有任何疑问，请拨打本产品所提供的公司客服电话。

产品环保信息提示性说明

请按照产品说明书的要求使用和维护本产品，不当利用或者处置本产品可能会对环境和人类健康造成影响。

依照国家《废弃电器电子产品回收处理条例》的有关规定，当您计划将此产品废弃时，请将其交给具有废弃电器电子产品处理资格的处理企业进行处理。产品中有毒有害物质含量信息参照上表。

Robert Bosch Hausgeräte GmbH
Carl-Wery-Straße 34
81739 München
Germany
www.bosch-home.com

9001002843

C